Round 1 - Thursday, September 15, 2022

SHOTLINK

Fortinet Championship

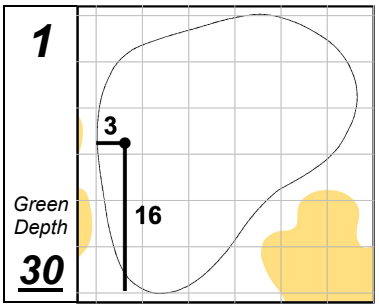

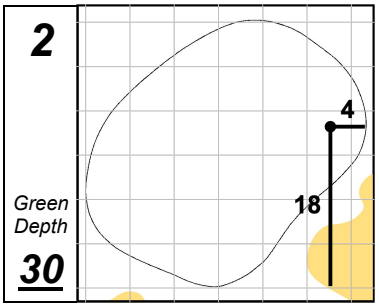

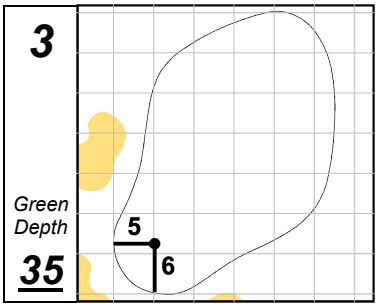

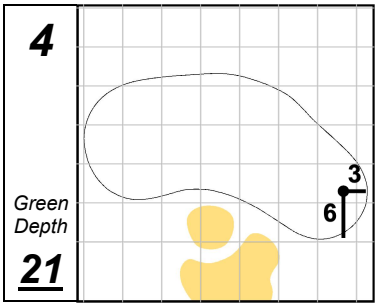

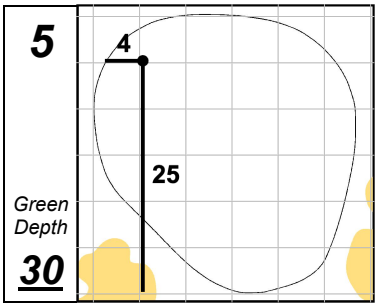

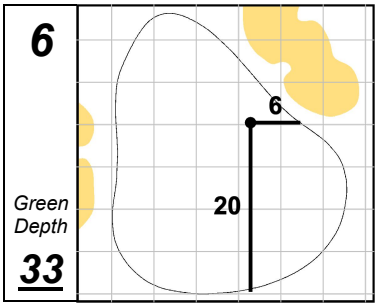

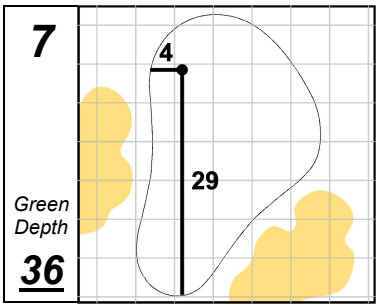

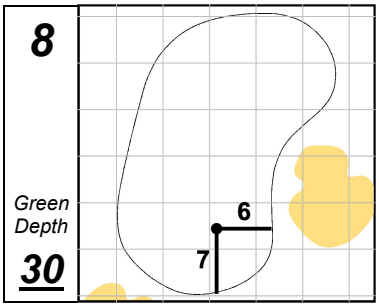

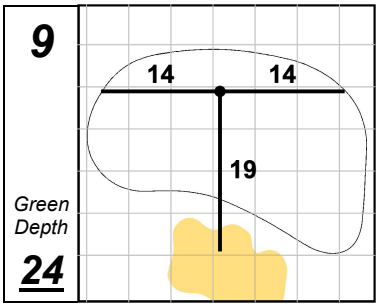

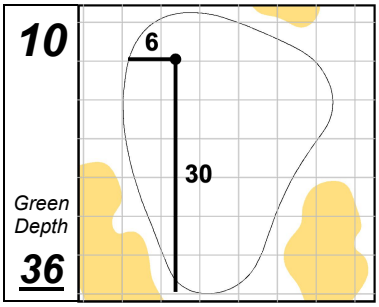

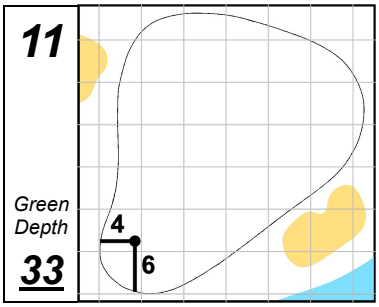

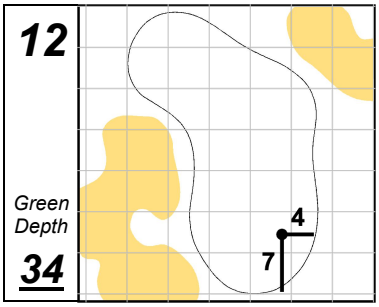

Silverado Resort and Spa (North Course)

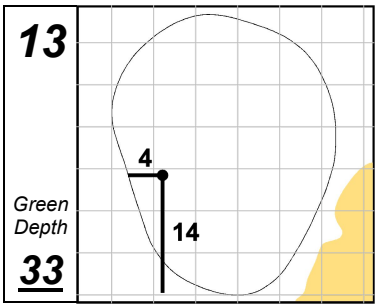

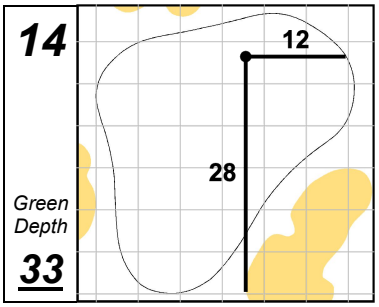

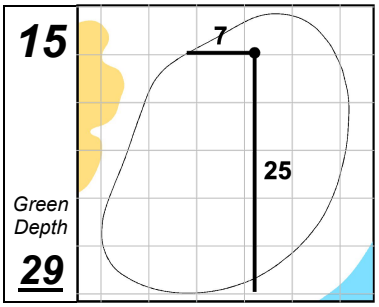

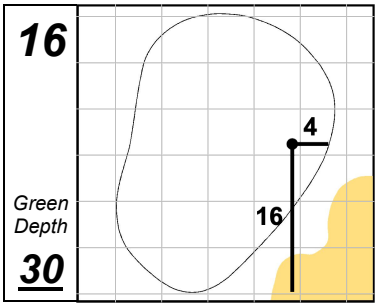

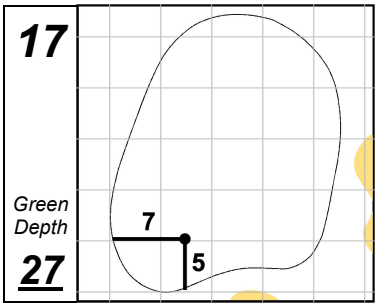

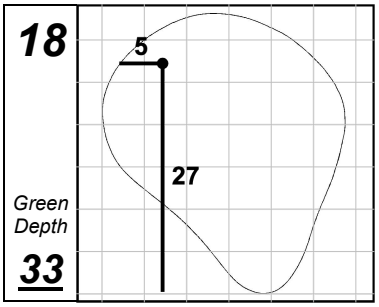

Each side of a complete square on the green represents 5 YARDS.

Wednesday, September 14, 2022 8:17:07 AM